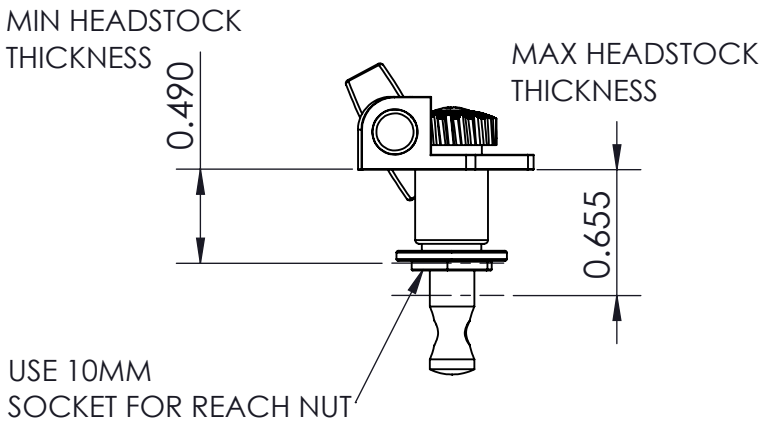

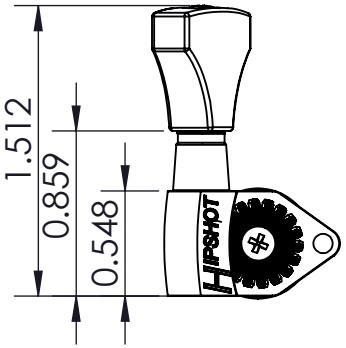

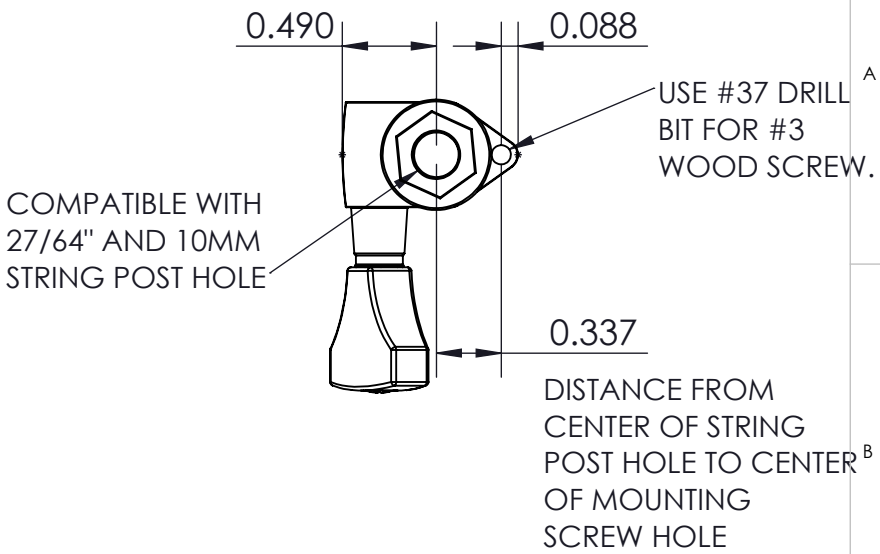

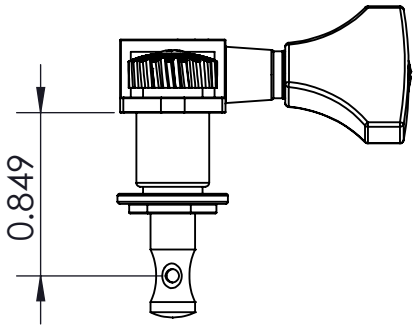

21.5MM

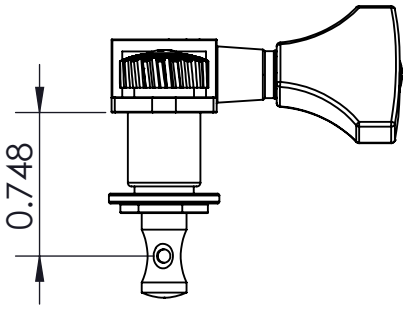

19MM

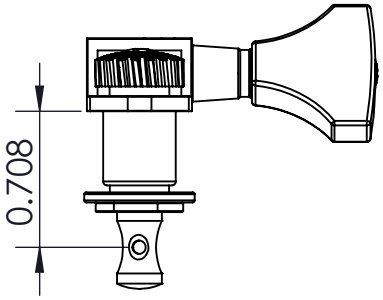

18MM

WEIGHT (WITH MOUNTING HARDWARE): 1.15oz

THIS DRAWING IS THE SOLE PROPERTY OF HIPSHOT PRODUCTS, INC.
ALL RIGHTS ARE RESERVED.
DIMENSIONS AND PRODUCT FEATURES ARE SUBJECT TO CHANGE WITHOUT NOTICE.

UNLESS OTHERWISE SPECIFIED:
DIMENSIONS ARE IN INCHES
TOLERANCE: ± .005

IMAGE NOT DRAWN TO SCALE

Classic Open Guitar Tuner

HIPSHOT
8248 STATE ROUTE 96
Interlaken, NY 14847 U.S.A.
TEL:607-532-9404 FAX:607-532-9530
E-MAIL: info@HipshotProducts.com